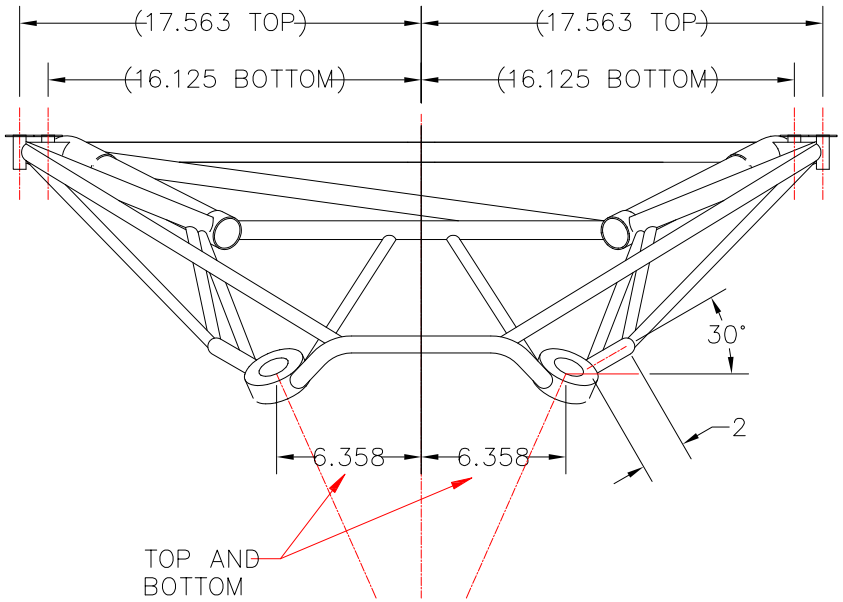

TOP VIEW

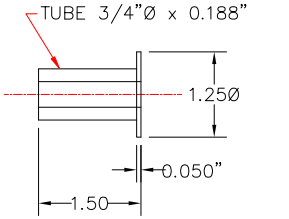

BUSHING ASSEMBLY
HALF SCALE

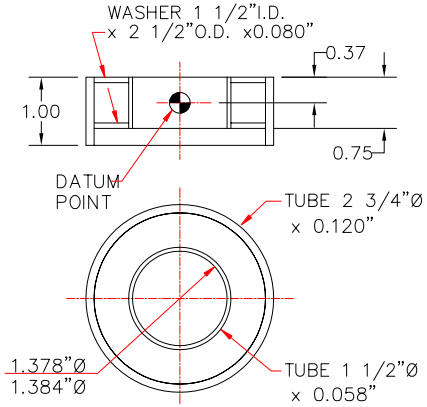

SOCKET ASSEMBLY
HALF SCALE

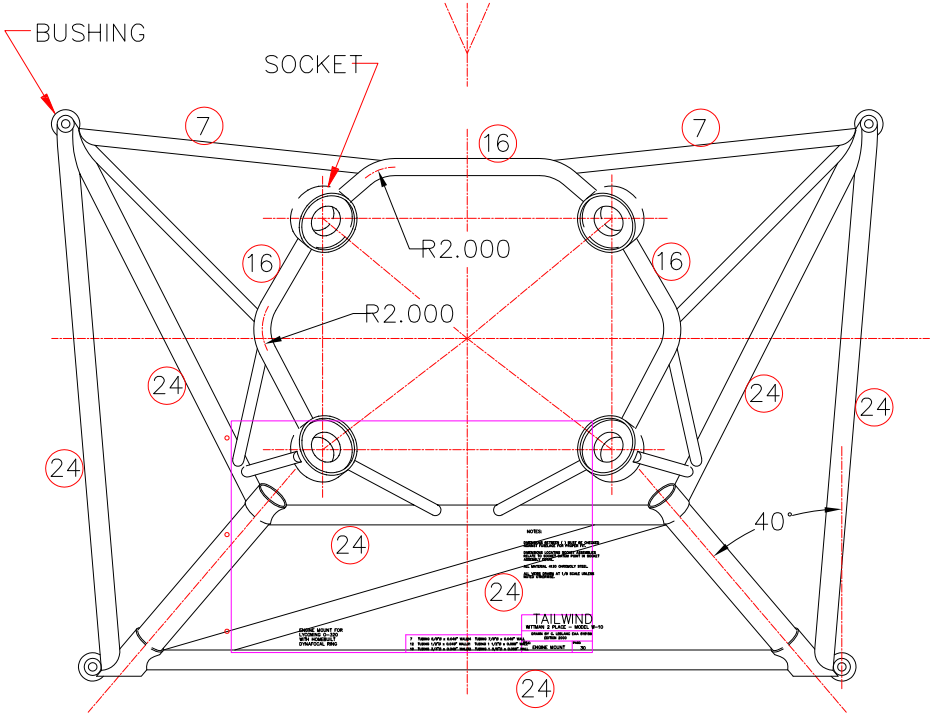

FRONT VIEW

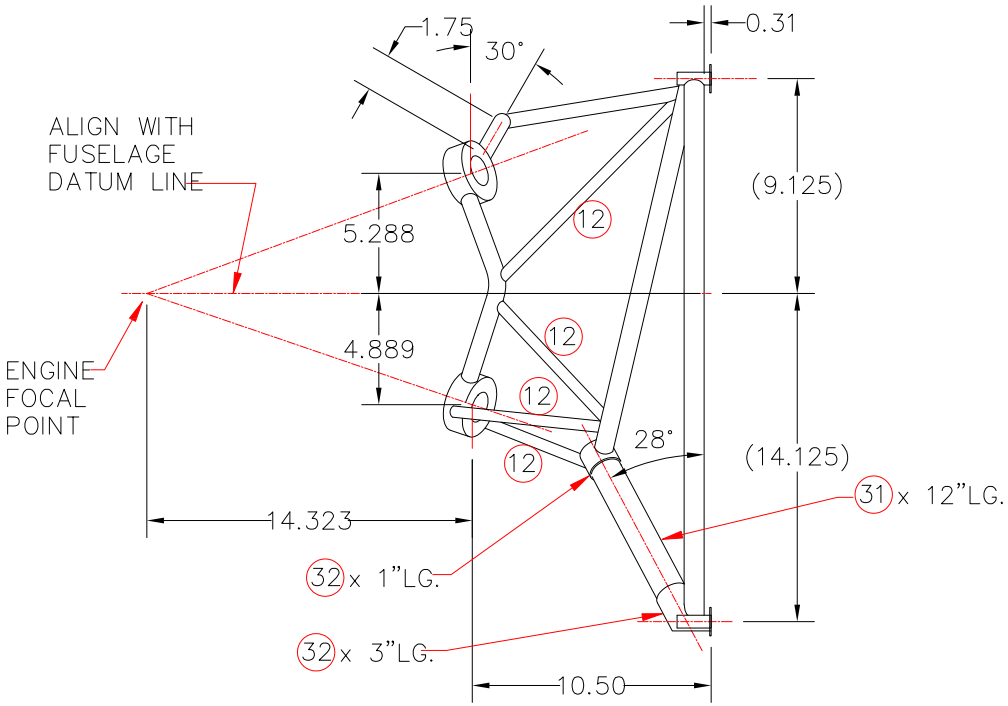

SIDE VIEW